Data Sheet

Article number: 20343125M8KS
Description: E+G levelling foot
GN 343.1-25-M8-KS

Measures

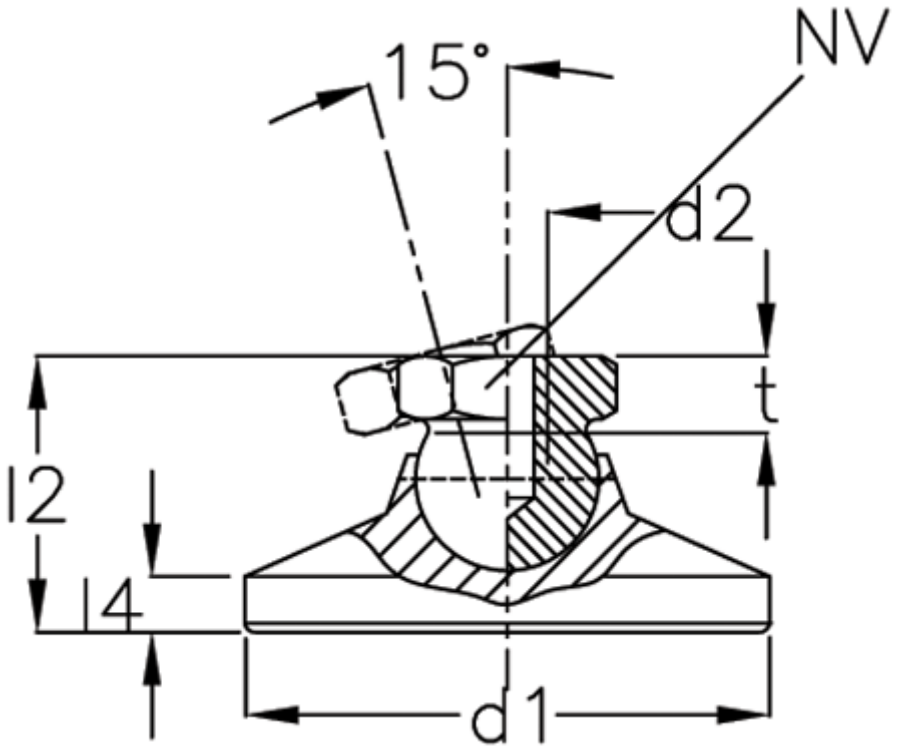

d1	= 25
d2	= 8
l2	= -
l4	= -
NV	= 12
Static load (kN)	= 14
t min	= 9

Product drawings and brochures of any kind may contain errors for which Brd. Klee A/S cannot be liable.